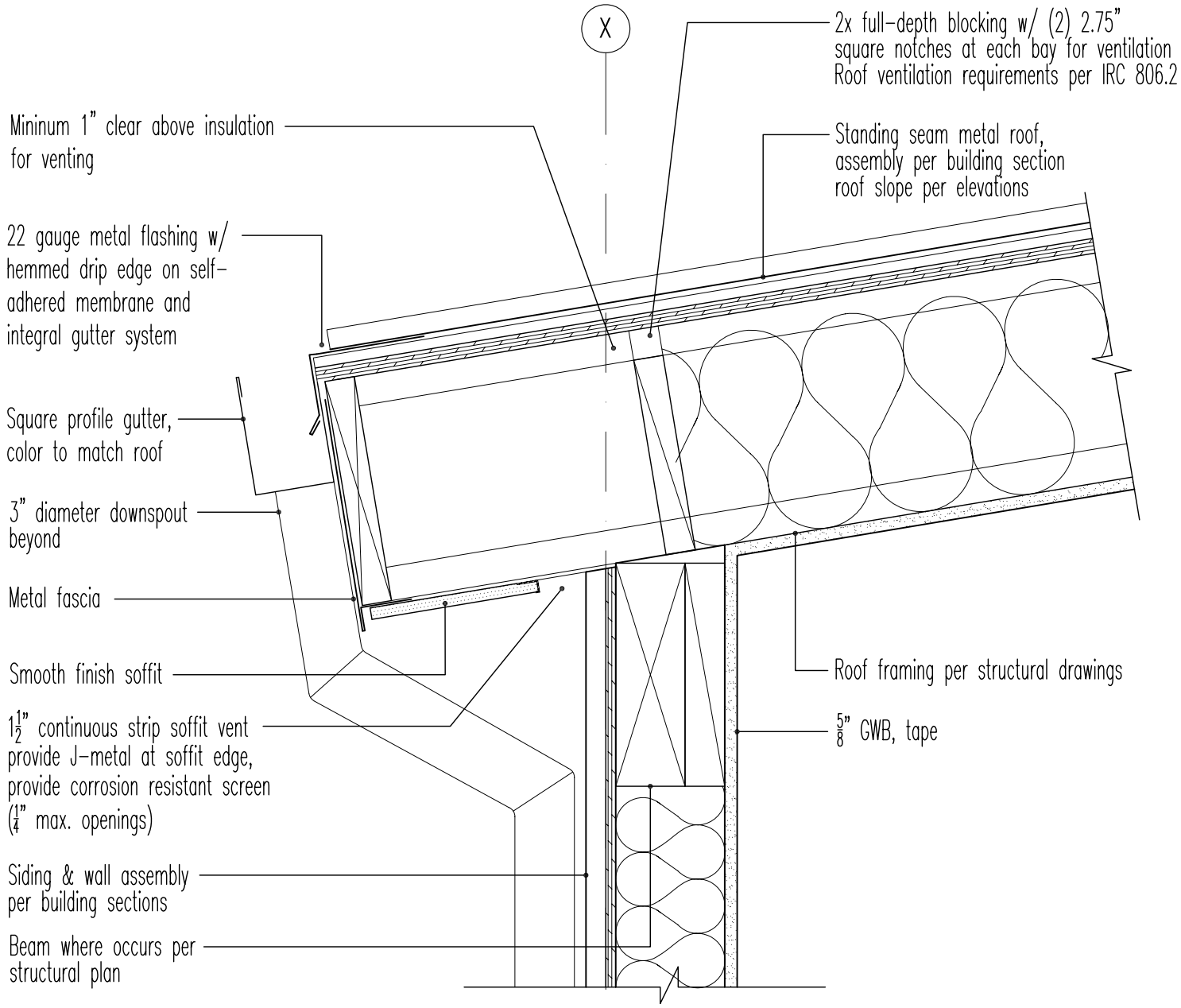

3

Roof overhang at Gutter

6" 3" 0 1 2 3